ROBERTSON RENT-ALL INC

INFO SHEET

KUBOTA BX23

STARTING PROCESS

BEFORE STARTING THE ENGINE, MAKE SURE THAT ALL LEVERS (INCLUDING AUXILIARY CONTROL LEVERS) ARE IN THEIR NEUTRAL POSITIONS, THAT THE PARKING BRAKE IS ENGAGED, AND THAT THE POWER TAKE-OFF (PTO) IS DISENGAGED OR “OFF”. FASTEN THE SEAT BELT, AND ENSURE THAT THE R.O.P.S. IS LOCKED INTO POSITION..

FIGURE 1

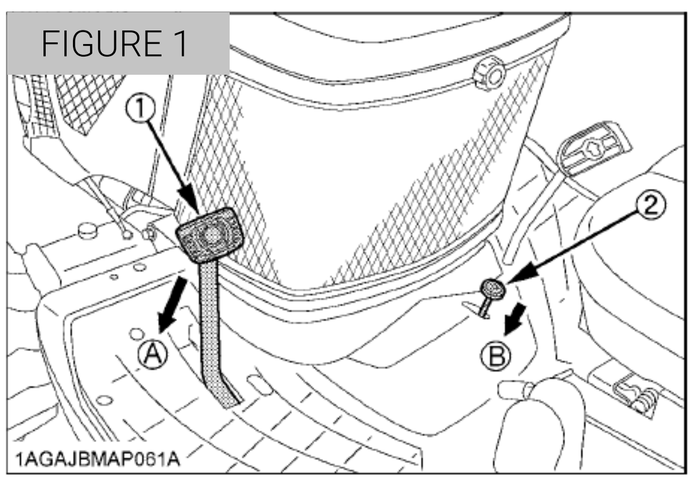

(1) Brake pedal
(2) Parking brake lock pedal
(A) "DEPRESS"
(B) "PUSH DOWN (2) WHILE DEPRESSING (1)"

1. ENGAGE THE PARKING BRAKE (FIGURE 1)
2. MAKE SURE THAT THE PTO IS “OFF” (FIGURE 2)
3. MAKE SURE THAT THE THROTTLE IS IN THE LOWEST POSITION (FIGURE 3) TOWARDS THE TURTLE.
4. TURN THE KEY TO THE “START” POSITION. *
5. BRING THE THROTTLE TO THE HIGHEST POSITION (TOWARDS THE RABBIT). **

* IN COLDER TEMPERATURES, IT IS BEST TO ACTIVATE THE GLOW PLUGS PRIOR TO STARTING THE ENGINE. THIS IS DONE BY TURNING THE KEY TO THE “RUN” POSITION (THE GLOW PLUG INDICATOR WILL LIGHT UP ON THE PANEL). LEAVE IN THIS POSITION FOR ROUGHLY 30 SECONDS. AFTER THE 30 SECONDS, TURN THE KEY TO THE “START” POSITION. IF IT’S NOT TURNING OVER, REPEAT THE GLOW PLUG PROCESS.

** THE MACHINE IS BUILT TO ALWAYS RUN ON FULL THROTTLE. OPERATING THE MACHINE ON LOW THROTTLE CAN CAUSE DAMAGE TO THE HYDRAULIC PUMP.

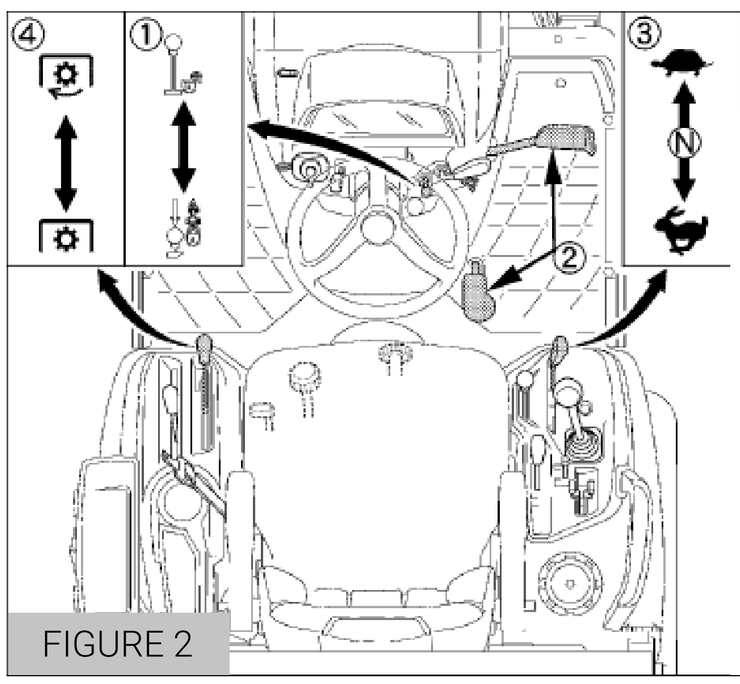

FIGURE 2

(1) Speed set rod
(2) Speed control pedal
(3) Range gear shift lever (Hi-Lo)
(4) PTO clutch lever

"ON" *"OFF"*
"High"
(N) "NEUTRAL"
"Low"
"ON"
"OFF"

NOTE :
- The speed control pedal automatically return to "NEUTRAL" when the operator's foot is released from the pedal.

FIGURE 3

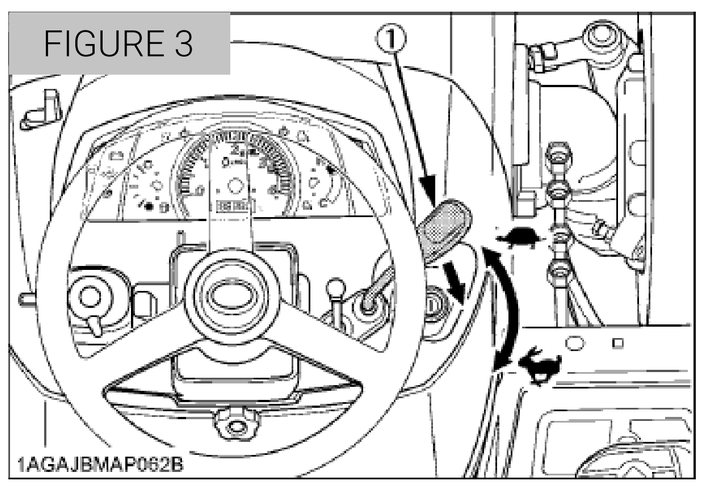

(1) Hand acelerator lever
"INCREASE"
"DECREASE"

SEAT ADJUSTMENT

FIGURE 1

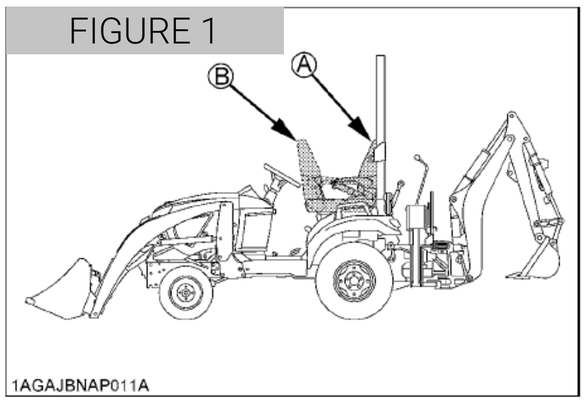

(A) "TRACTOR DRIVING POSITION"
(B) "BACKHOE POSITION"

FIGURE 2

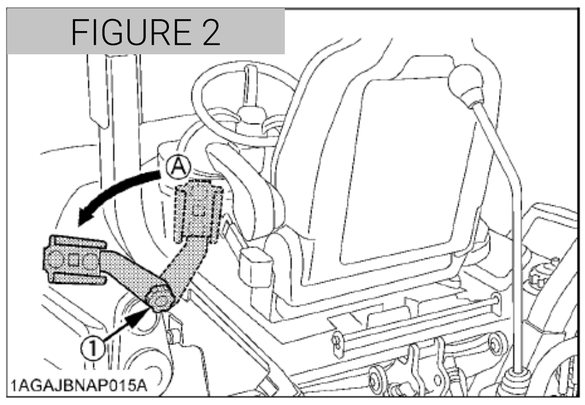

(1) Bracket *(A) "LEFT"*

FIGURE 3

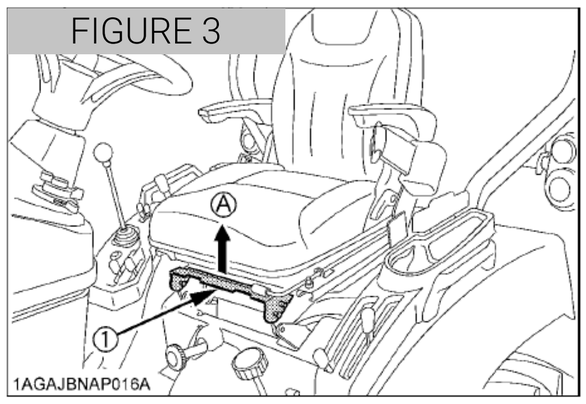

(1) Seat lock lever *(A) "RELEASE"*

FIGURE 4

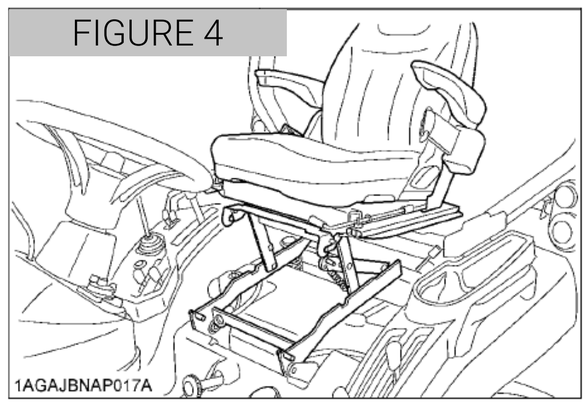

FIGURE 5

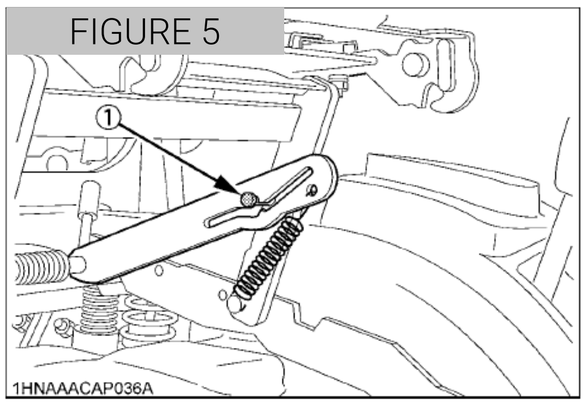

(1) Seat pin

FIGURE 6

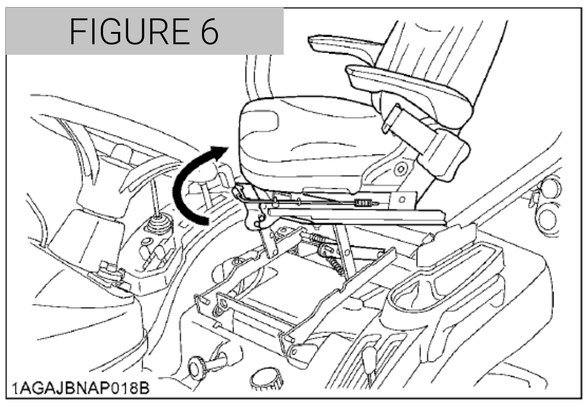

FIGURE 7

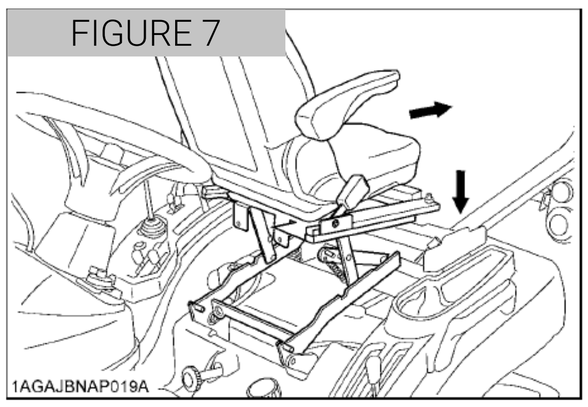

(1) Seat lock lever *(A) "RELEASE"*

FIGURE 8

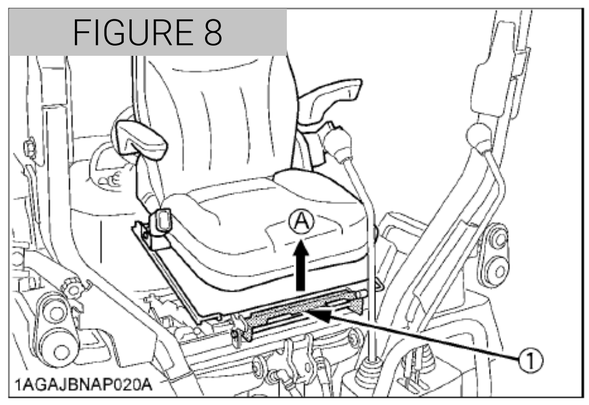

1. LOOSEN THE KNOB NUT BEHIND THE ROPS AND MOVE THE BRACKET LEFT AS IN FIGURE 2.

2. PULL THE LEVER UP AS SHOWN IN FIGURE 3 TO RELEASE THE SEAT LOCK.

3. RAISE THE SEAT UNTIL THE SEAT PIN COMES IN TO THE DETENT NOTCH AS SHOWN IN FIGURE 4 & 5.

4. TURN THE SEAT AROUND REARWARD AS SHOWN IN FIGURE 6.

5. PUSH THE SEAT BACKWARD, THEN THE SEAT PIN WILL COME OUT FROM THE DETENT NOTCH. PUSH THE SEAT DOWN UNTIL THE LEVER IS LOCKED INTO POSITION.

6. AFTER ADJUSTING THE SEAT, ENSURE THAT IT IS LOCKED INTO POSITION.

MACHINE NOT TURNING OVER

IF YOU ARE TURNING THE KEY AND THERE IS NO INDICATION OF THE MOTOR TURNING OVER, THE MOST COMMON CAUSE IS THAT THE PTO IS ENGAGED.

WHEN STARTING THE BACKHOE, THE PTO CLUTCH LEVER NEEDS TO BE IN THE “OFF” POSITION AS IN THE IMAGE BELOW.

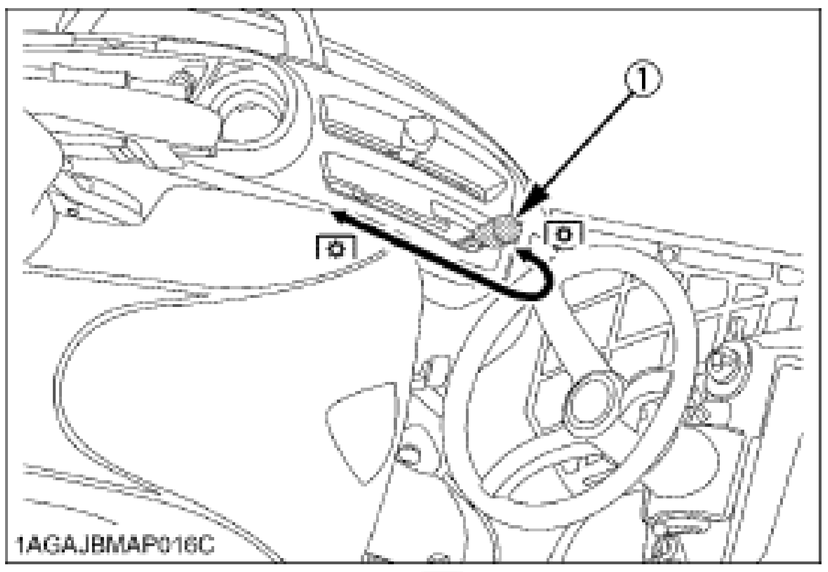

(1) PTO clutch lever
"ON" "ENGAGE"
"OFF" "DISENGAGE"

LIST OF CONTROLS

THROTTLE

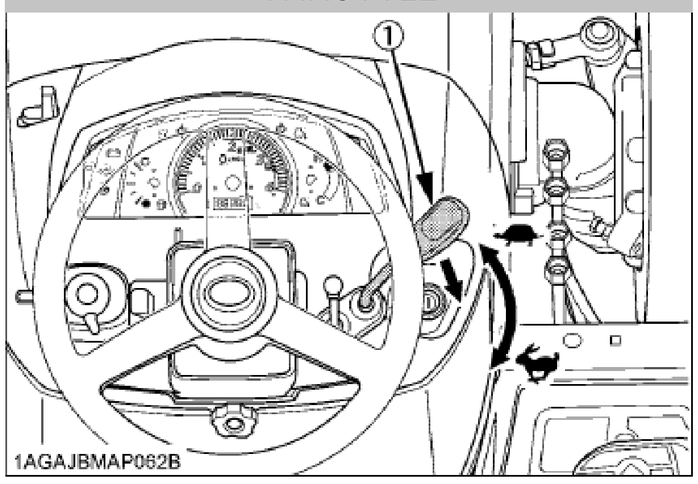

(1) Hand acelerator lever
"INCREASE"
"DECREASE"

PARKING BRAKE

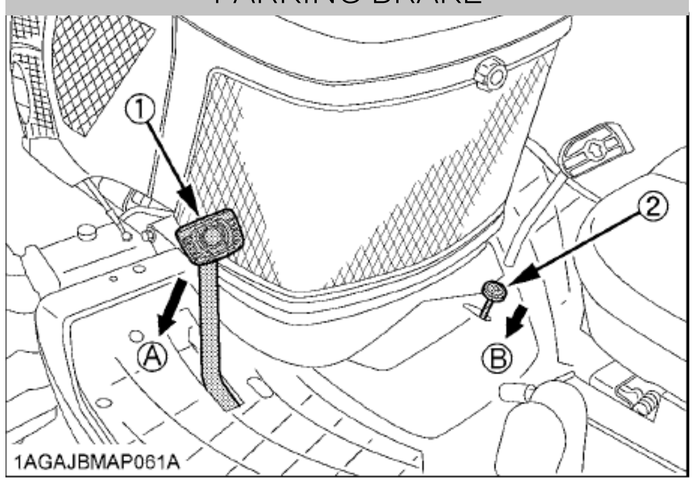

(1) Brake pedal
(2) Parking brake lock pedal
(A) "DEPRESS"
(B) "PUSH DOWN (2) WHILE DEPRESSING (1)"

CRUISE CONTROL

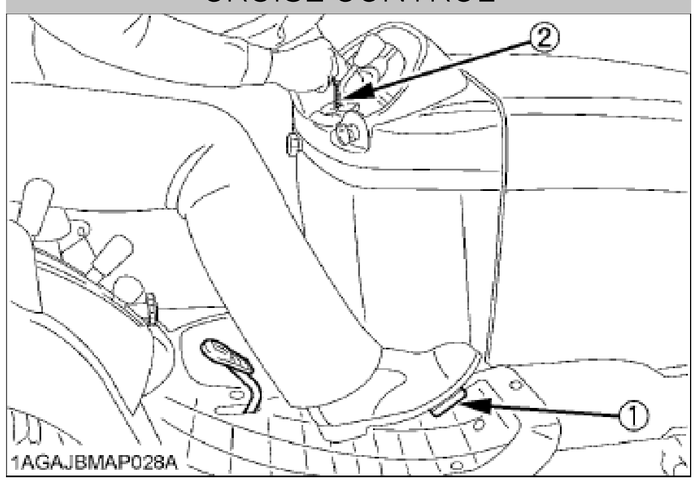

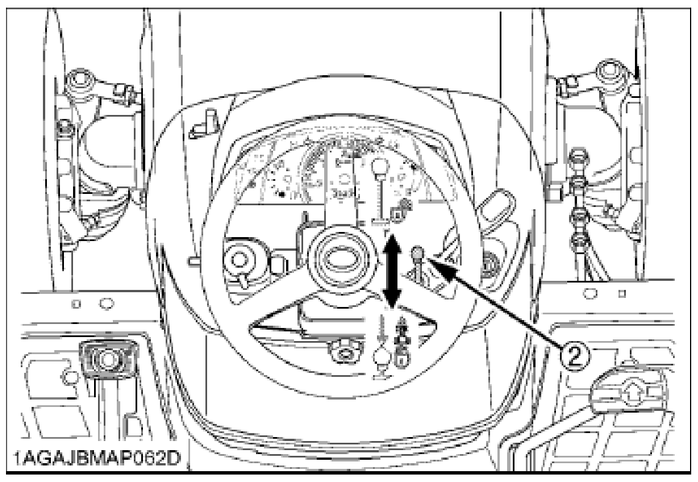

(1) Speed control pedal
(2) Speed set rod
"ON"
"OFF"

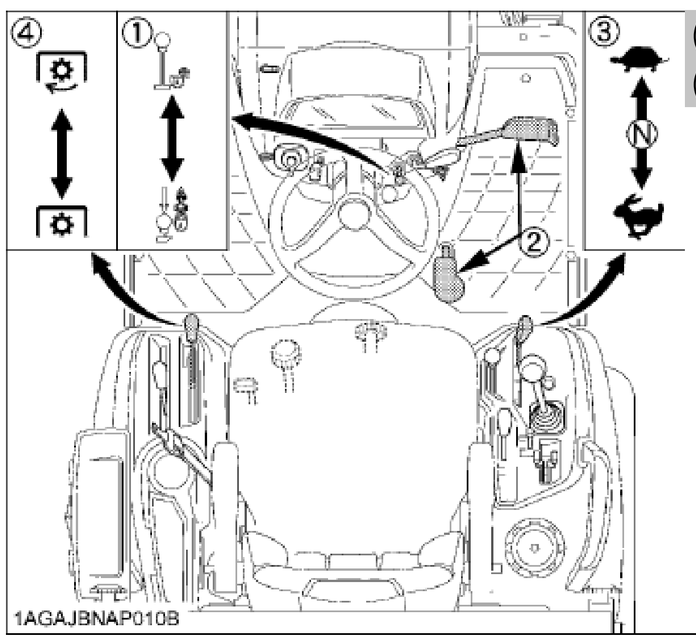

(1) CRUISE CONTROL
(2) FORWARD & REVERSE PEDAL
(3) GEAR SELECTOR *
(4) PTO LEVER **

(1) Speed set rod
"ON"
"OFF"
(2) Speed control pedal
(3) Range gear shift lever (Hi-Lo)
"High"
(N) "NEUTRAL"
"Low"
(4) PTO clutch lever
"ON"
"OFF"

NOTE :
- The speed control pedal automatically return to "NEUTRAL" when the operator's foot is released from the pedal.

BUCKET CONTROL LOCK

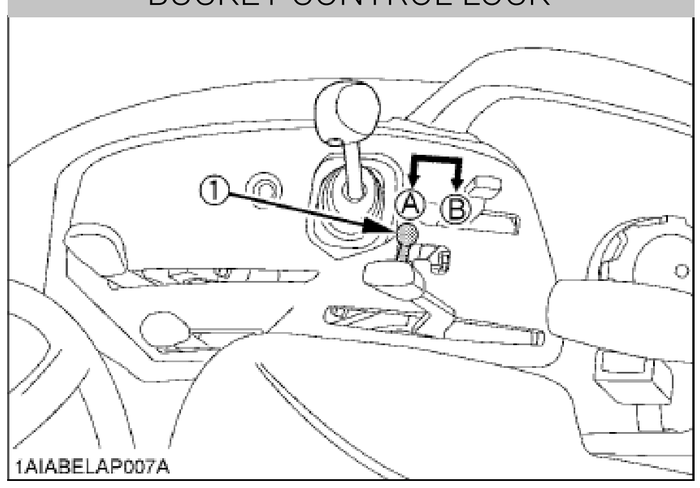

(1) Lock lever
(A) "LOCK"
(B) "UNLOCK"

* HIGH GEAR IS FOR TRANSPORTATION ONLY, ALL LOADS SHOULD BE MOVED ON LOW GEAR

** PTO IS NOT USED WITH RENTAL UNIT, SHOULD ALWAYS BE “OFF”

** THE FOLLOWING CONTROLS ARE NOT USED WITH RENTAL UNIT **

MOWER BLADE ADJUSTMENT

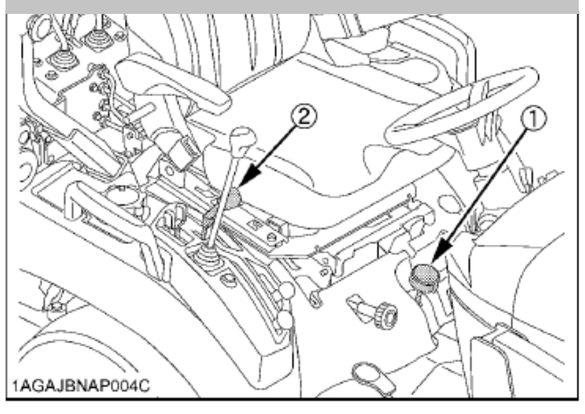

(1) Cutting height control dial
(2) Hydraulic control lever

ATTACHMENT LOWERING SPEED

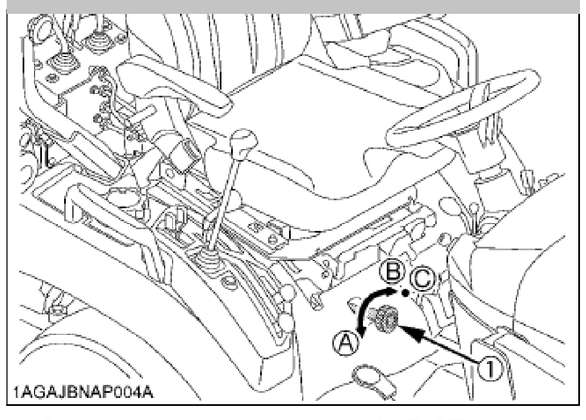

(1) 3-point hitch lowering speed knob
(A) "FAST"
(B) "SLOW"
(C) "LOCK"

HYDRAULIC CONTROL

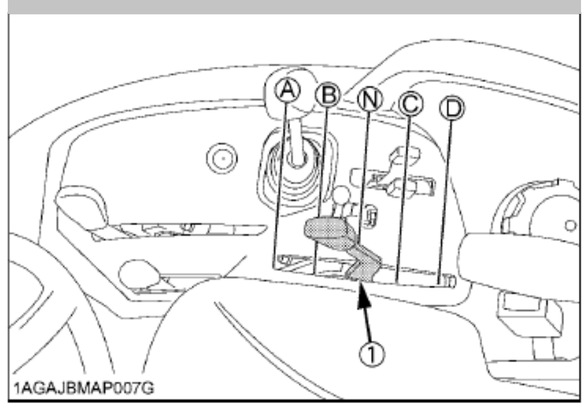

(1) Hydraulic control lever
(A) "DOWN"
(B) "SLOW DOWN"
(N) "NEUTRAL"
(C) "SLOW UP"
(D) "UP"

PTO ADJUSTMENT

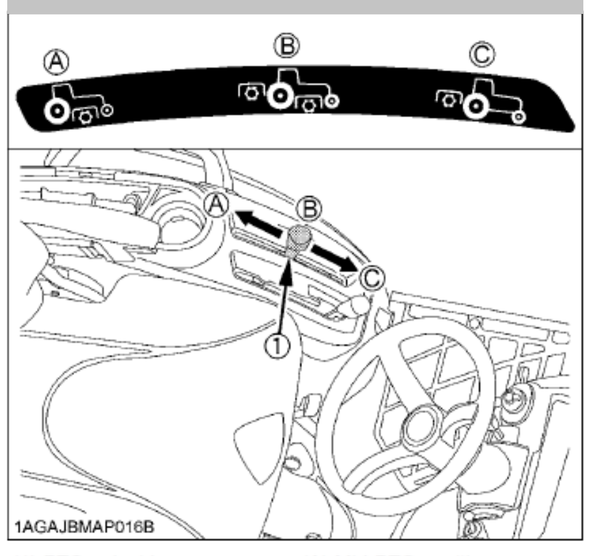

(1) PTO select lever
(A) Mid-PTO position
(B) Mid-Rear-PTO position
(C) Rear-PTO position